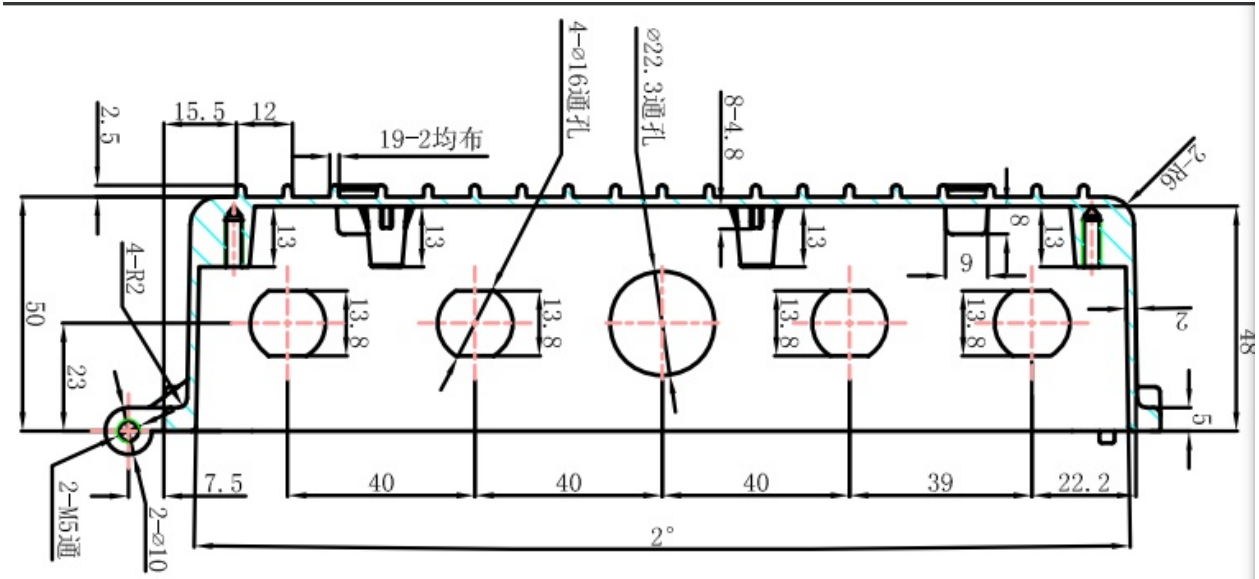
4-⌀16通孔
⌀22.3通孔
8-4.8
19-2均布
2-R6
4-R2
2-M5通
2-⌀10
2.5
15.5
12
13
13.8
8
9
2
5
48
50
23
7.5
40
40
40
39
22.2
2°

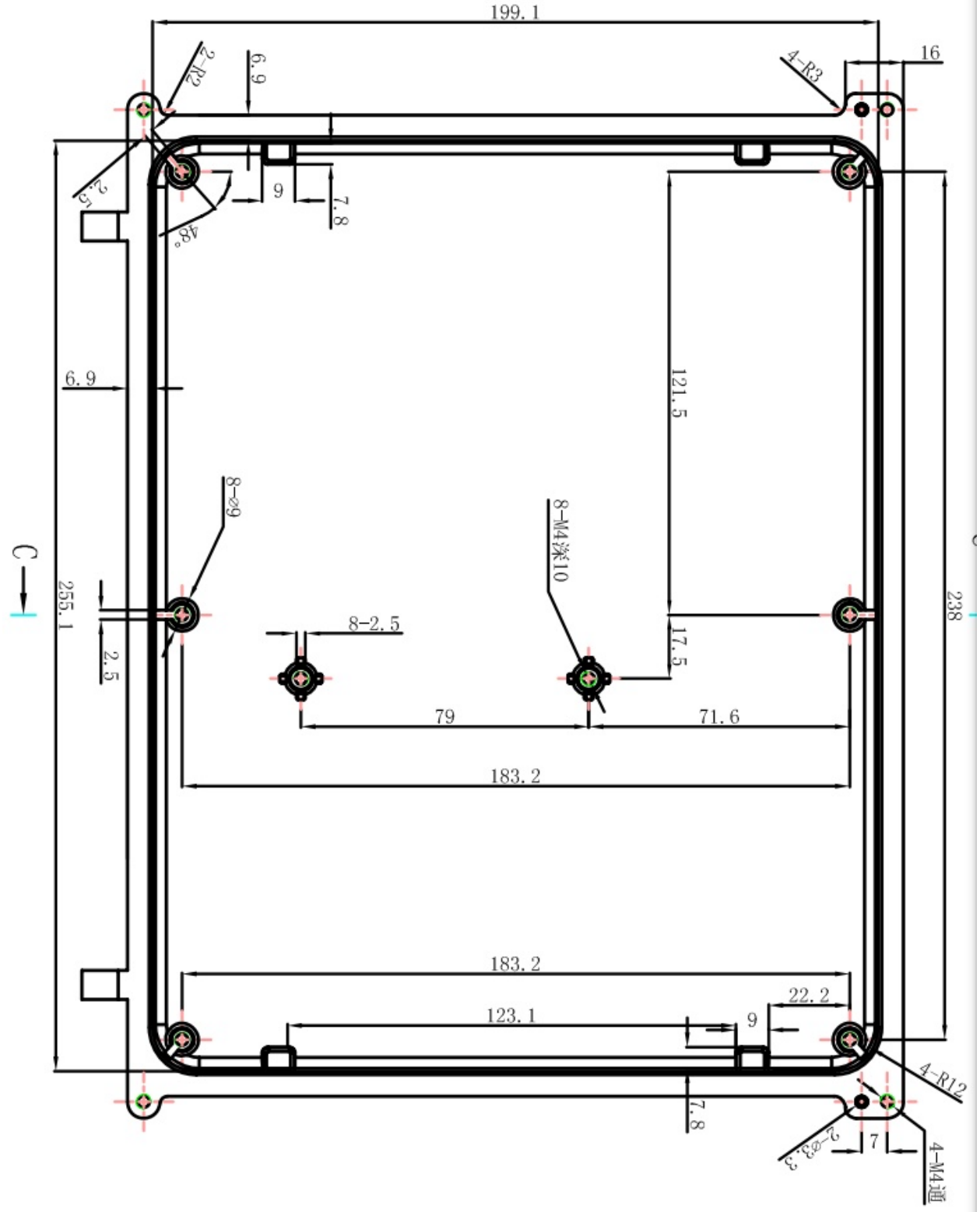
199.1
2-R2
6.9
4-R3
16
2.5
9
7.8
48°
6.9
121.5
8-⌀9
8-M4深10
C
255.1
2.5
8-2.5
17.5
238
79
71.6
183.2
183.2
22.2
123.1
9
4-R12
7.8
7
2-⌀3.5
4-M4通

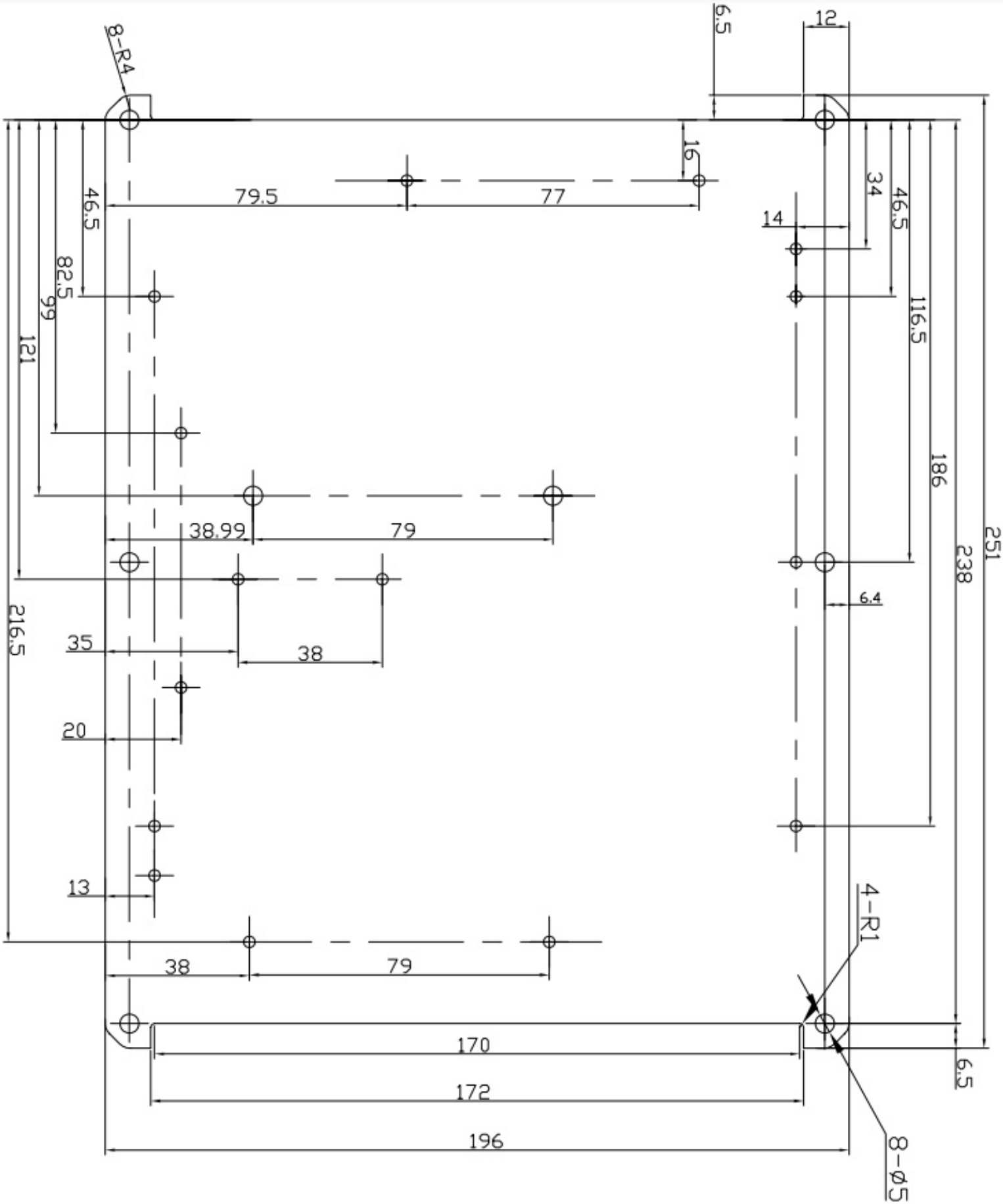
8-R4
6.5
12
16
79.5
77
46.5
34
46.5
14
82.5
99
121
116.5
186
251
238
38.99
79
6.4
216.5
35
38
20
13
4-R1
38
79
170
172
196
6.5
8-ø5

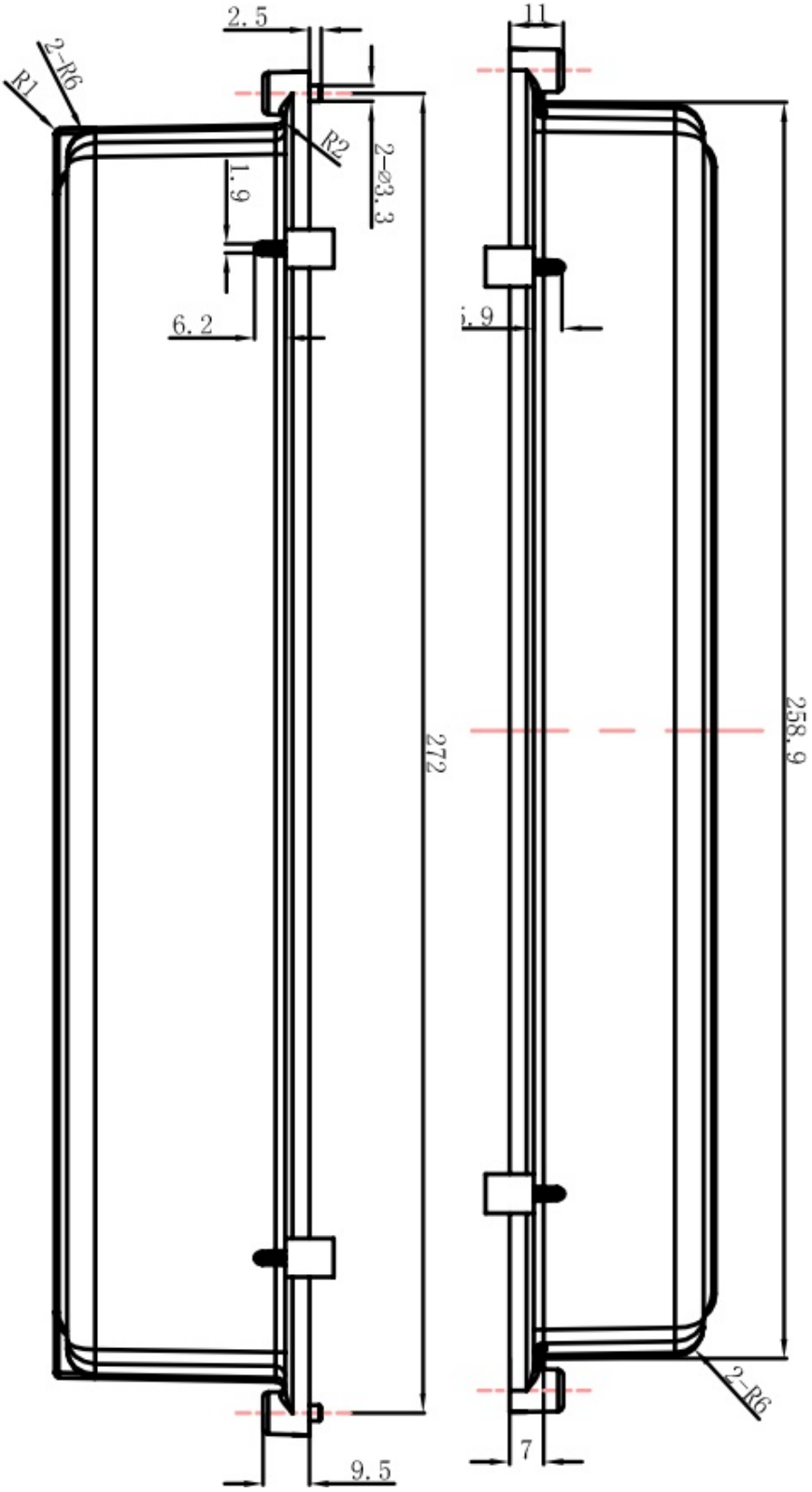
2.5
2-R6
R1
R2
1.9
6.2
9.5
272
2-Ø3.3
11
1.9
7
258.9
2-R6

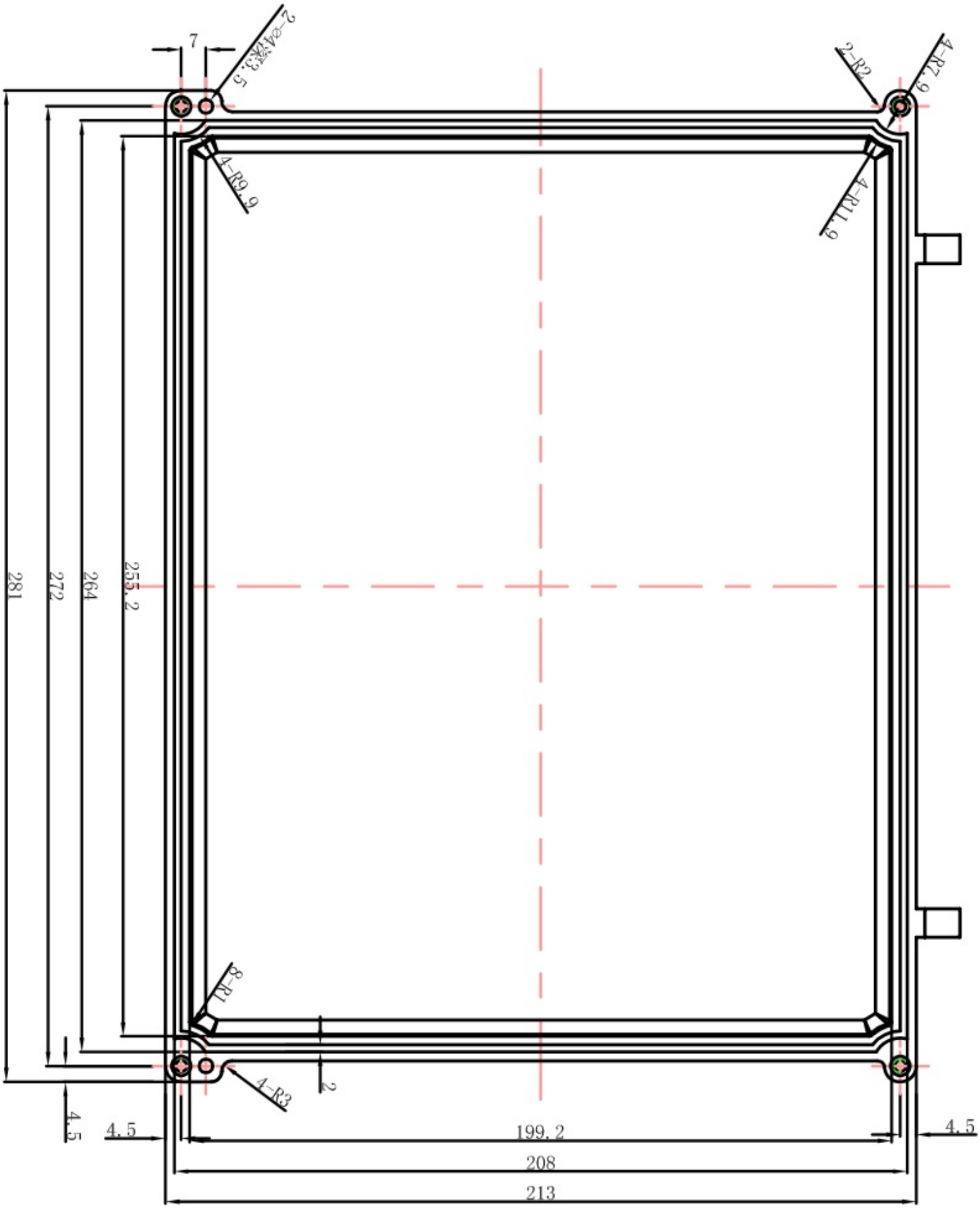
7
2-φ4×3.5
2-R2
4-R2.9
4-R9.9
4-R11.9
281
272
264
255.2
8-R1
2
4-R3
4.5
4.5
199.2
4.5
208
213

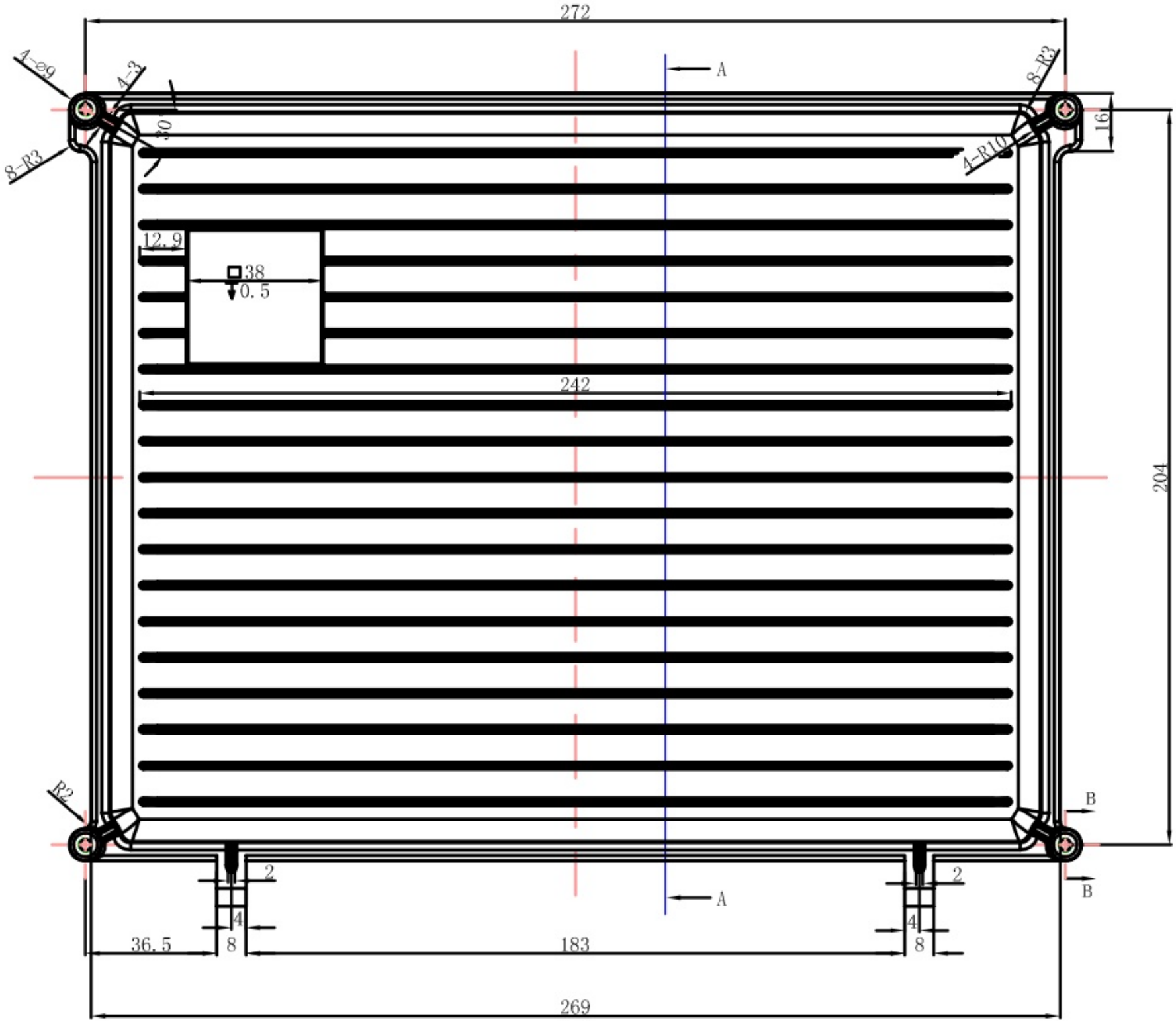
272
A
4-ø9
4-3
30°
8-R3
8-R3
16
4-R10
12.9
38
0.5
242
204
R2
B
B
2
2
4
4
36.5
8
183
8
A
269

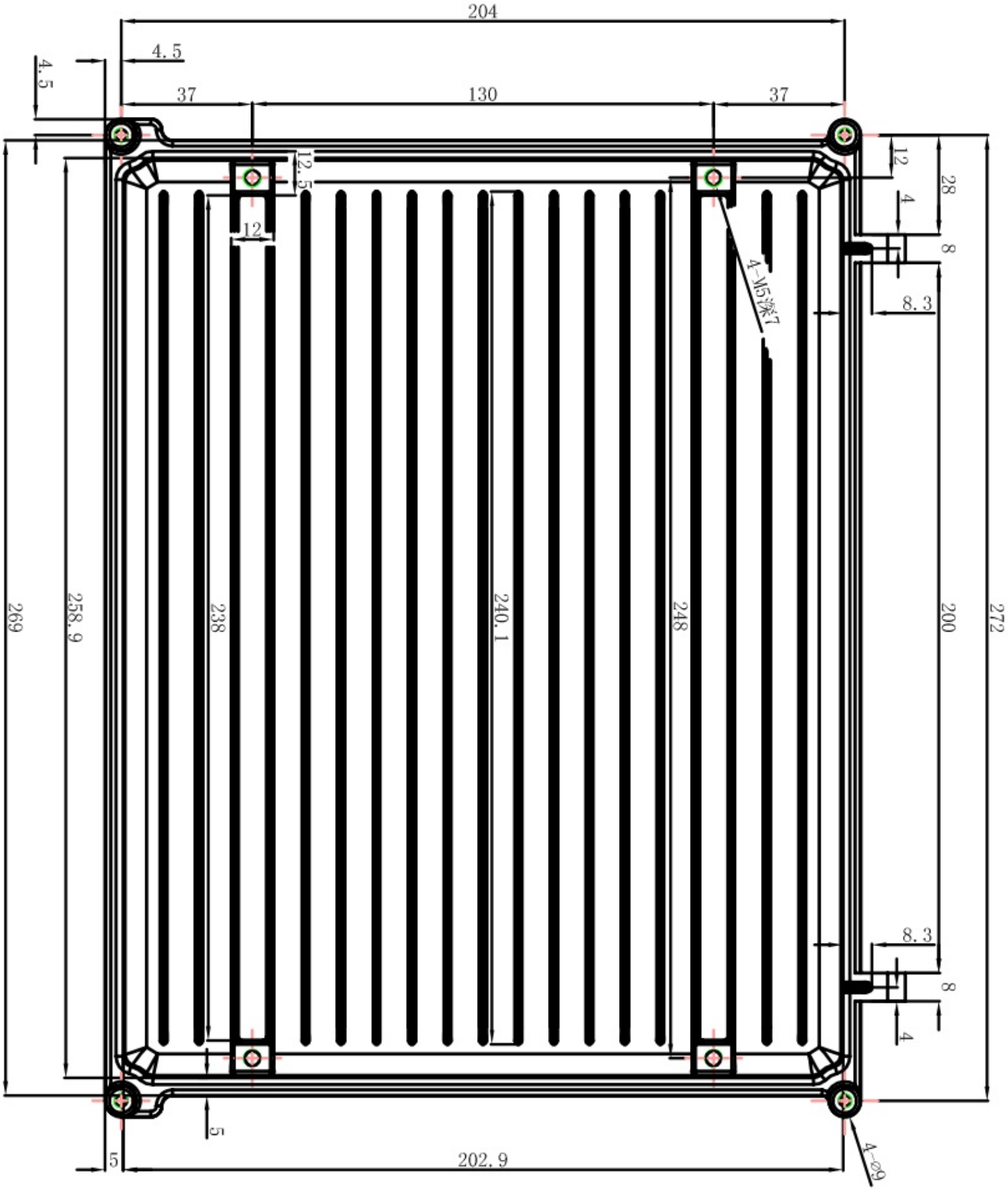
204
4.5
4.5
37
130
37
12.5
12
12
28
4
8
8.3
4-M5深7
269
258.9
238
240.1
248
200
272
8.3
8
4
5
5
202.9
4-Ø9